10 Profiting with Ram EDM

Uses of Ram EDM

There are many operations in which ram EDM is the most efficient way to machine parts. Sometimes, numerically controlled mills are used for blind cavities, but when sharp corners, intricate details, or fine finishes are required, as in Figure 10:1, ram EDM is used. For very intricate details, ram EDM is particularly useful. See Figure 10:2.

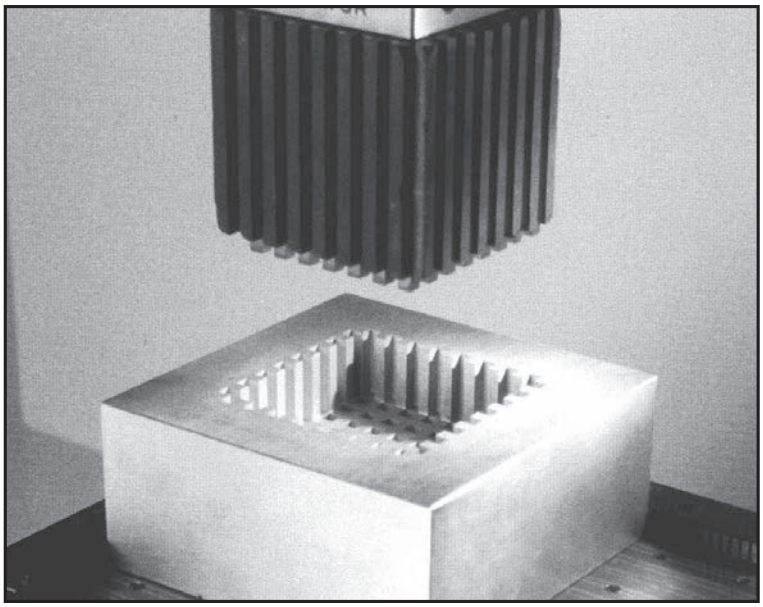

Courtesy Agie

Figure 10:1

Blind Cavity

Courtesy Sodick

Figure 10:2

Intricate Details EDMed

Benefits of Ram EDM

A. Different Shapes and Sizes

Ram EDM can machine a wide variety of shapes and sizes, as illustrated in Figures 10:3 and 4. Also, this non-contact machining method with low-pressure flushing allows it to produce very thin sections.

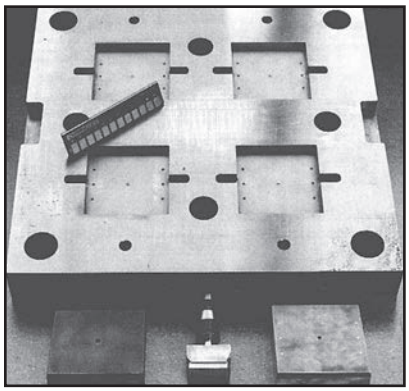

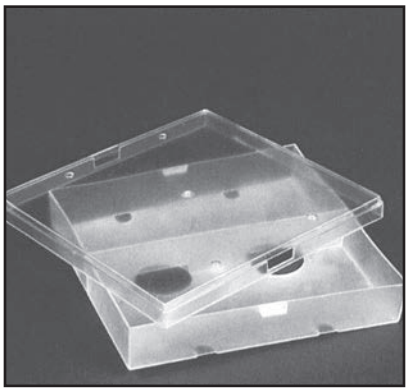

Multi-Cavity Mold for Plastic Containers

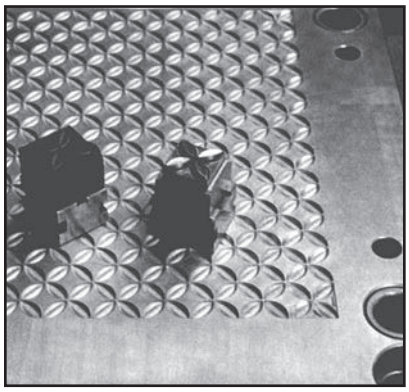

Mold for Rubber Mat

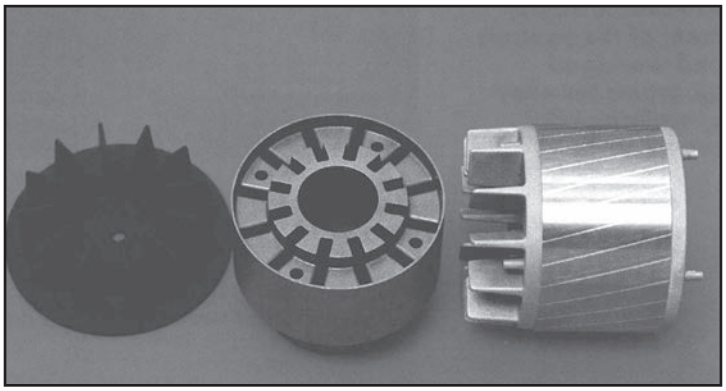

Mold for Motor Rotor Cooling Blades

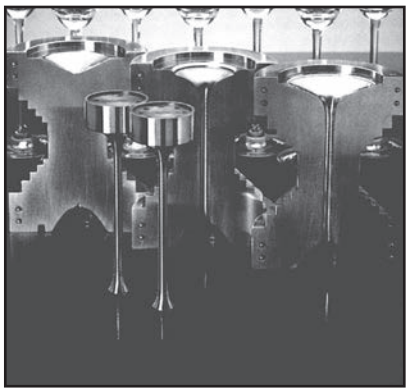

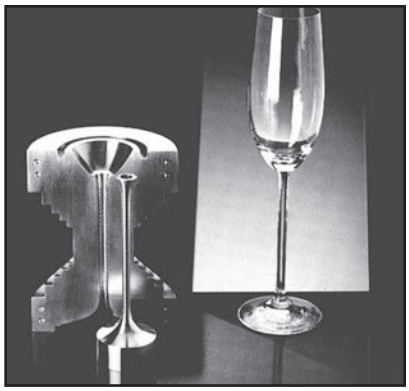

Mold for Glass Stems

Courtesy Charmille

Figure 10:3

Examples of Molded Shapes Produced with Ram EDM

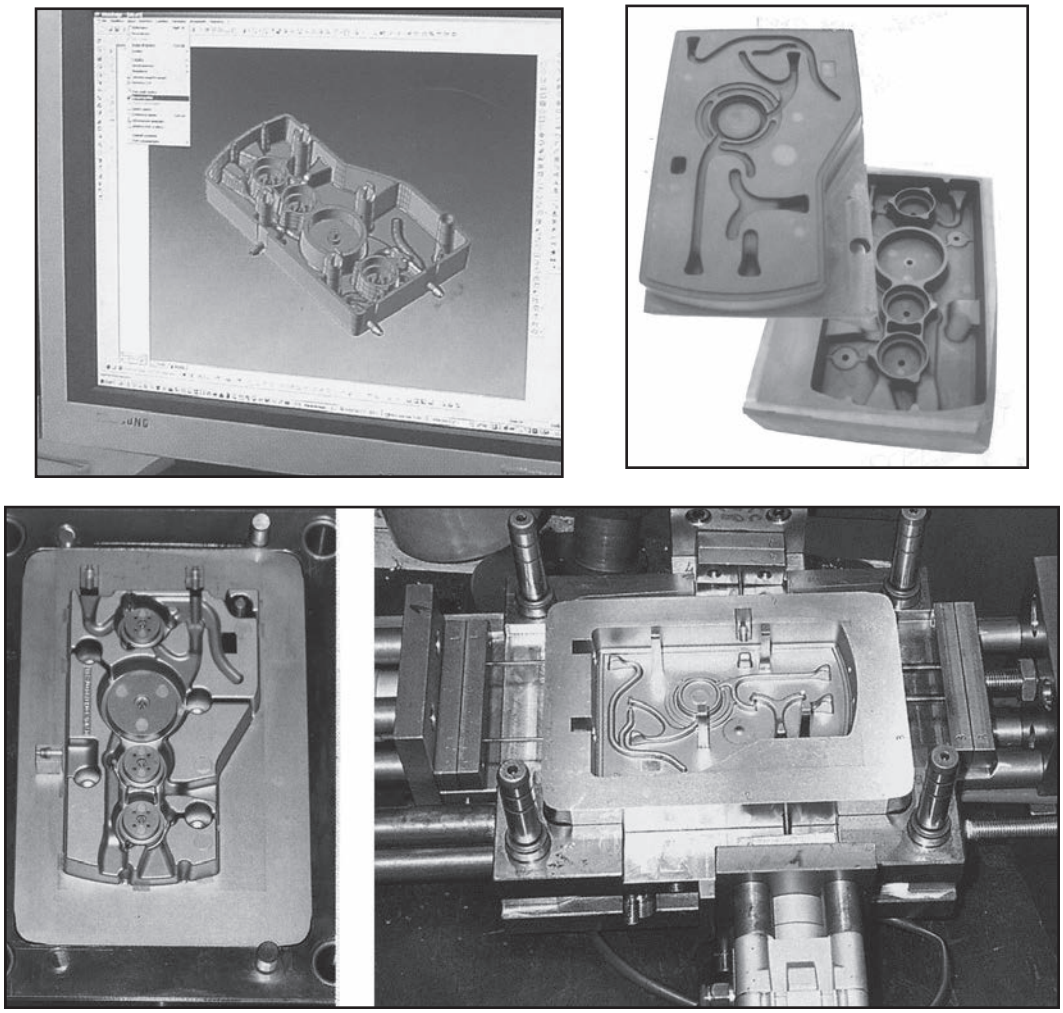

Figure 10:4

Courtesy Agie

Medical Casing from Design to Mold

B. Accuracy and Finishes

Depending on the accuracy of the electrode, tolerances of up to +/- .0001" (.0025 mm) can be held. Furthermore, if the correct amount of current is used, very fine finishes can be obtained. Certain machines can produce a mirror-type finish. Machines capable of producing mirror finishes eliminate the laborious method of polishing cavities.

C. Workpiece Hardness Not a Factor

Workpiece hardness has no effect on cutting. Therefore, hardened parts can be easily machined.

D. EDMing Threads into Hardened Parts

Ram EDM is capable of machining threads into hardened parts, difficult-to-machine alloys, and even carbide. CNC machines are capable of doing this by orbiting a threaded electrode.

Parts for Ram EDM

A. Molds

Ram EDM is an excellent machining method to produce molds. See Figure 10:5. Molds can be EDMed from miniature toys to large injected plastic molded parts for automobiles. Molded parts are produced when plastic is injected into preformed molds and cooled.

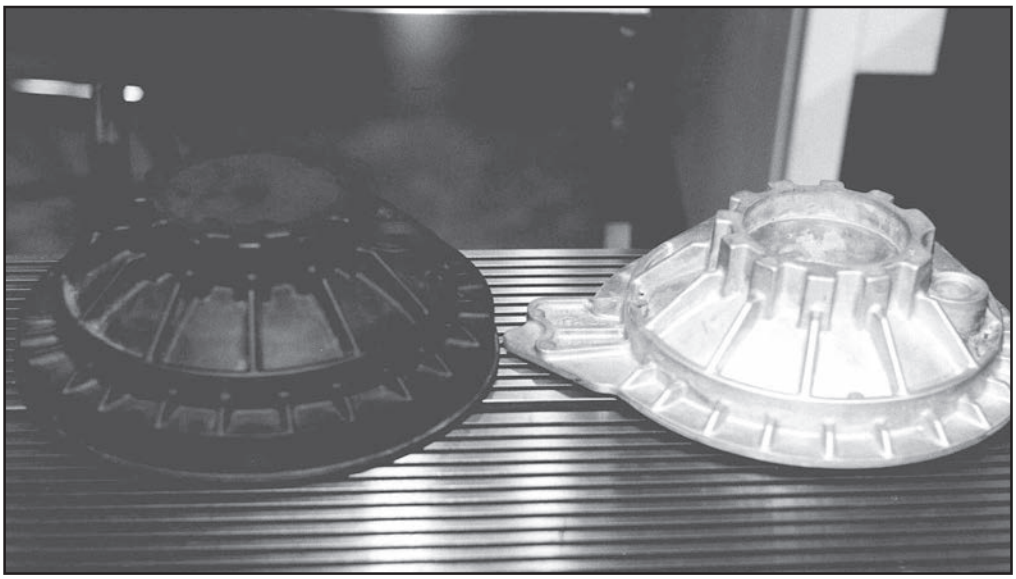

Courtesy Charmille

Figure 10:5

A Graphite Electrode and the Molded Part

B. Blind Keyways

Ram EDM can easily cut blind keyways, as in Figure 10:6. Wire EDM is usually used when keyways pass through the part.

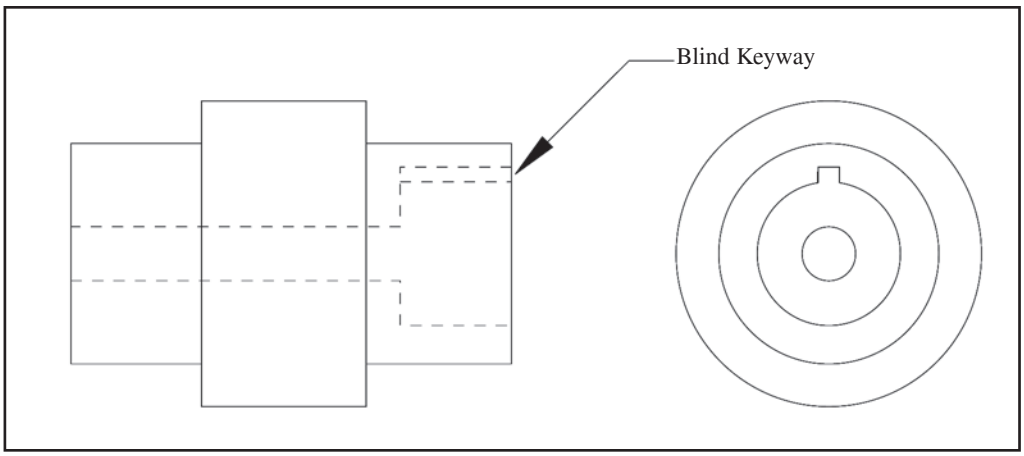

Figure 10:6

Blind Keyway

C. Internal Splines

When internal splines do not go through the part, as in Figure 10:7, then ram EDM is used to machine the splines.

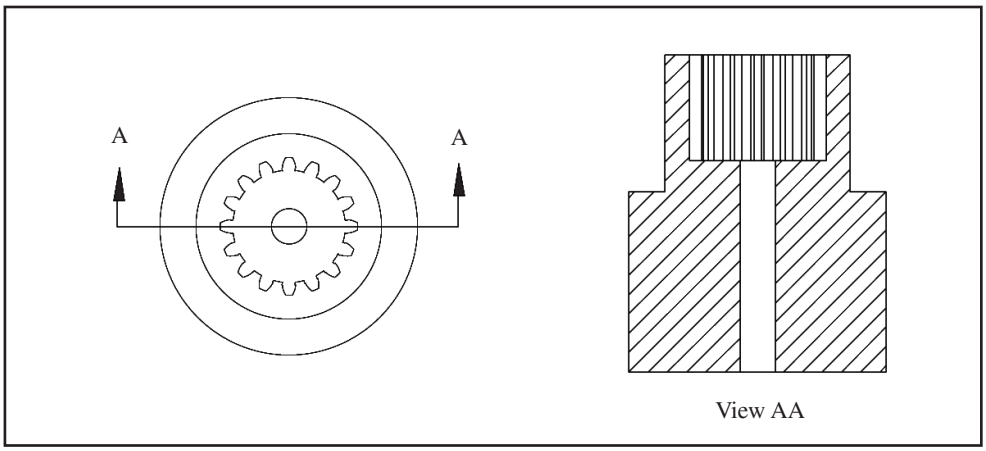

Figure 10:7
Internal Splines

D. Hexes for Special Bolts and Parts

Ram EDM is ideal to machine special bolts and parts with blind cavities, such as hexes, as shown in Figure 10:8.

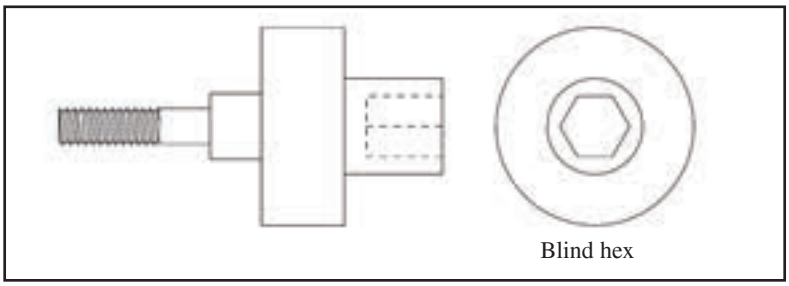

Figure 10:8
Hexes for Special Bolts and Parts

E. Helical Gear Machining

Orbiting machines can machine helical gears, as seen in Figure 10:9.

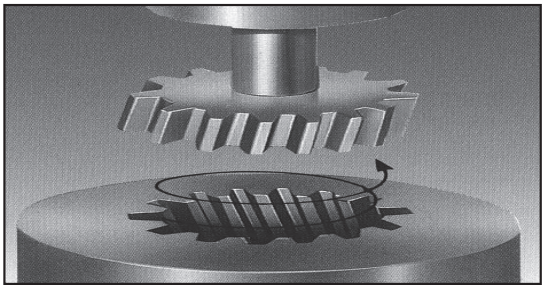

Courtesy Mitsubishi

Figure 10:9
Helical Gear Machining

Micro-machining for Ram EDM

Fine details can be machined with ram EDM. Figure 10:10 shows .012 inch (.30mm) ram EDMed to a depth of .030 inch (76mm). The image is next to a dime.

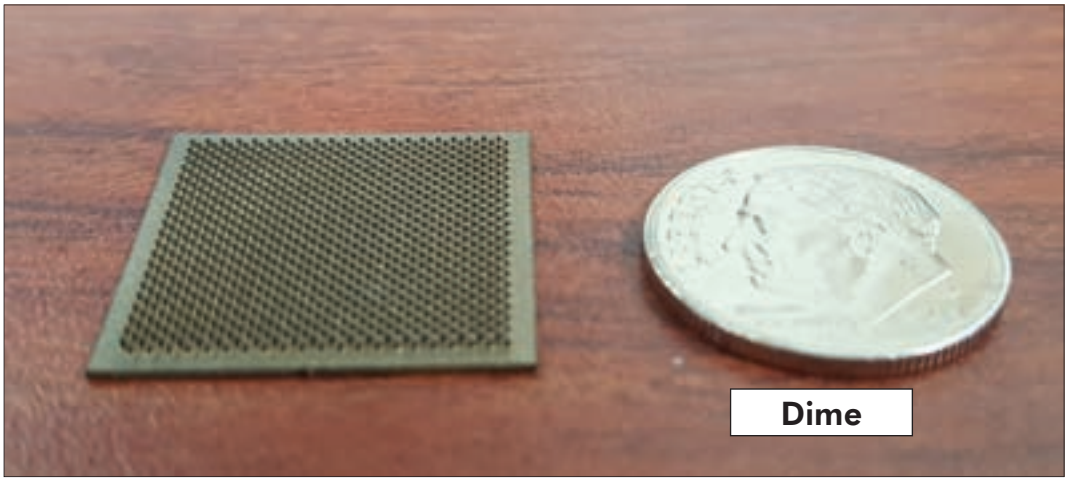

Figure 10:10

012 inch (.30mm) ram EDMed to a depth of .030 inch (76mm).

Materials for Ram EDM

Any electrically-conductive material can be machined with ram EDM, such as: tool steels, cold and hot rolled steel, stainless steels, inconel, hastalloy, stellite, aluminum, copper, brass, titanium, and carbide.

Some steels have a high sulfur content to aid in turning and milling. However, steel with high sulfur content can form sulfide inclusions which for fine details as in mold work may cause irregularities and have a negative impact on the surface finish. For mold work, it is preferable to work with steel that has low sulfur content. In polishing steel with high sulfur content, the softer steel matrix next to the sulfur inclusion tends to be polished out, leaving a void in the surface.

Speeding the Mold Processing

Mold makers often seek ways to speed up removing molded material. When certain mold areas take longer to cool than other areas, cycle times must be lengthened. Adding more water lines is not always feasible due to the configuration of the mold.

Processing speeds may be increased by placing a high thermal conductivity copper alloy, like Ampco alloy 940, into areas requiring faster cooling. Using such copper alloys can reduce the cycle time by 20% to 30%, since this material disperses heat six times faster than steel.

To EDM these copper alloys, a high grade graphite with negative polarity is used.

Another method to cool the mold quickly without substantially changing it is to replace steel core pins with copper alloy pins.

EDMing Carbide

Carbide ranges from high cobalt (16%), which is a low wear, high shock grade, to low cobalt (6%), which is a high wear, low shock grade. Since only the cobalt in carbide conducts electricity, carbide does not EDM as rapidly as steel. Therefore, the higher the percentage of cobalt, the faster the carbide can be EDMed.

Proper Procedures for Ram EDM

Many parts would be impossible to be machined without ram EDM. It is important to learn the proper procedures to maximize the benefits of this process, for by learning the proper use of ram EDM, one can dramatically reduce operating costs. The next few chapters will discuss the proper procedures for ram EDM.

Machining Large Pieces

Since our company is located in Houston, TX, there is much work for the oil field industry. We get many calls to ram EDM work on large workpieces. Figure 10:11 is an example of one of our jobs. We also make special fixtures so we can EDM on top of tall parts.

Figure 10:11

Marching a Large Workpiece

Our Ingersoll Gantry 2000 has a table load of 66,000 pounds, maximum electrode weight 3,106 pounds. Work tank size is X 6.6 feet (2m), Y 10.6 feet (3.2m), Z 53 inches (135mm). The area of the work tank is larger than a ping pong table. To install this machine we dug a hole 6.5 feet (2m) deep. The concrete slab under the machine is 1.5 feet (,45m) deep. The machine is 5 feet (1.5m) underground. See Figures 10:11-14.

Figure 10:12

Ingersoll Gantry 2000

Work tank size: X 6.6 feet (2m), Y 10.6 feet (3.2m), Z 53 inches (135mm)

Figure 10:13

Part weighed 4900 pounds. Stepped Keyway 4 inches (102mm) x 25.5 inches (648mm)

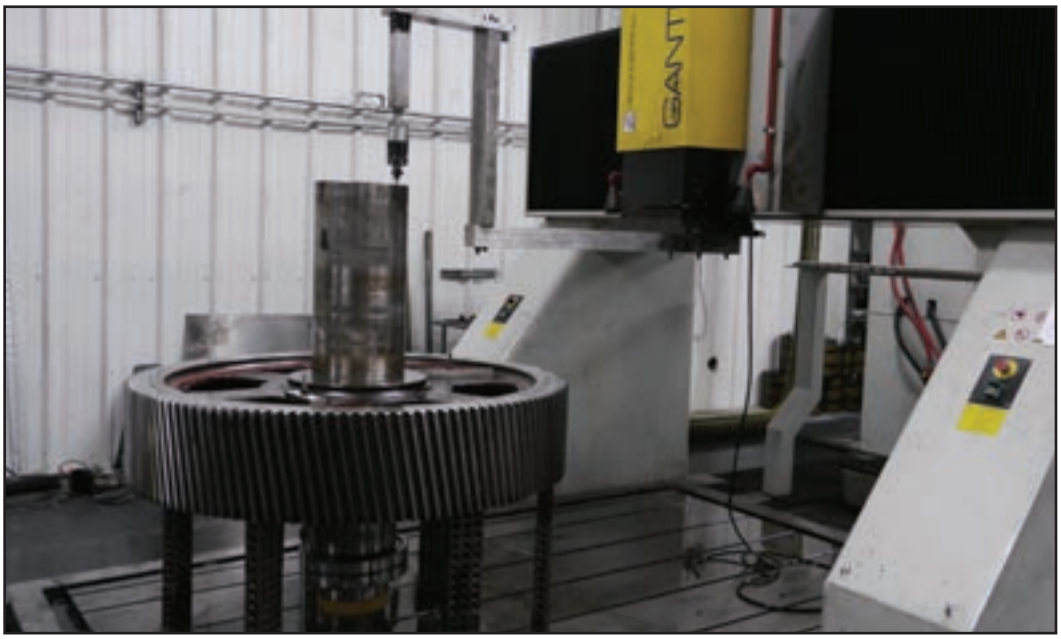

Figure 10:14

Large Gear Being EDMed

Free Training Videos (ReliableEDM.com)

Capabilities of Ram EDM (9:28)

EDMing Tall and Large Parts (7:53)